VERTICAL BLIND DELUXE CORDLESS - EXPLODED VIEW

Vertical Blind - Cordless

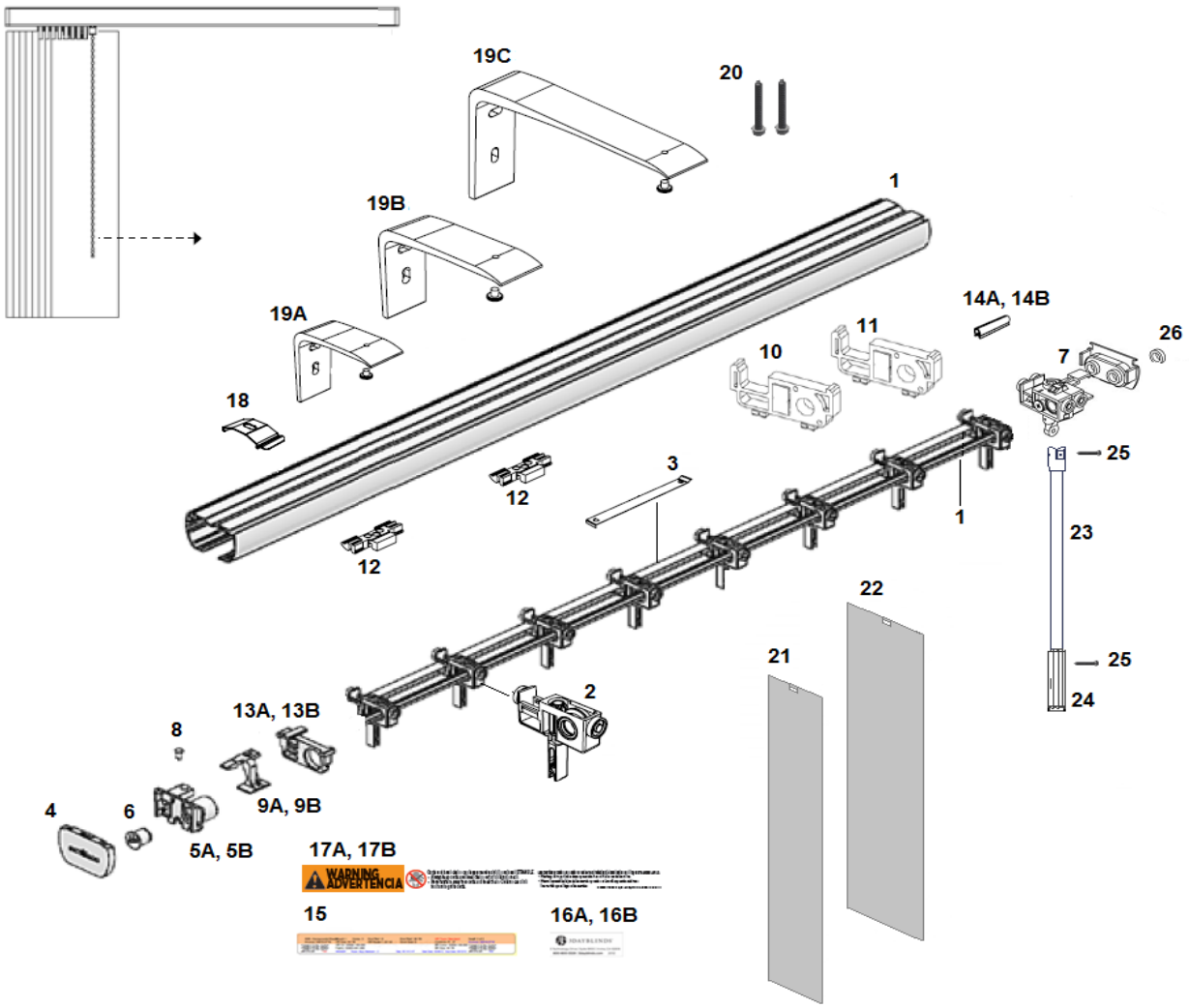

VERTICAL BLIND DELUXE CORDLESS - EXPLODED VIEW

Item	Part Number	Description	Item	Part Number	Description
1	15034-XXX-000	Headrail and Tilt Rod	17A	00002-118-000	Child Warning Label - Long
2	15062-000-000	Heavy Duty Carrier	17B	00002-119-000	Child Warning Label - Short
3	VARIES	Metal Link varies from 13 mm to 220mm	18	15037-XXX-000	Clip Mounting Support – White or Grey
4	15041-XXX-000	End Cap White or Grey	19A	15039-XXX-089	Wall Bracket Aluminum for 3.5" Slat - White or Grey
5A	15042-XXX-000	End Cap Inside Left White or Grey	19B	15040-XXX-127	Wall Bracket Aluminum for 3.5" & 5" Slat - White or Grey
5B	15043-XXX-000	End Cap Inside Right White or Grey	19C	15051-XXX-250	Wall Bracket Aluminum for 10" Slat - White or Grey
6	15045-100-000	Tilt Rod Lock	20	05973-000-000	#8 1.5" Hex Screw
7	15057-000-000	Vertical Wand Control Unit	21	VARIES	3.5" PVC Slat
8	15017-000-000	Connecting Pin	22	VARIES	5" PVC Slat
9A	15014-XXX-000	Window Cleaner Hook Left White or Grey	23	05802-000-XXX	Vertical Blind Wand
9B	15015-XXX-000	Window Cleaner Hook Right White or Grey	24	05802-000-000	Wand Grip for Vertical Blind
10	15031-100-000	Magnetic Tilt Rod Support	25	05802-001-000	#3 7/16 Screw for Vertical Wand
11	15030-100-000	Non-Magnetic Tilt Rod Support	26	15001-000-000	Cordless Retaining Ring
12	15044-100-000	Tilt Rod Support Stopper			
13A	15035-100-000	Runner Train Connector Left			
13B	15036-100-000	Runner Train Connector Right			
14A	15027-000-089	Tube 31/2" Slat Omega Spacer			
14B	15027-000-127	Tube 5" and 10" Slat Omega Spacer			
15	00005-028-000	White Job Tickets			
16A	00002-112-000	Label – 3DB Logo Black			
16B	00002-114-000	Label – 3DB Logo White			

VERTICAL BLIND VALANCES - EXPLODED VIEW

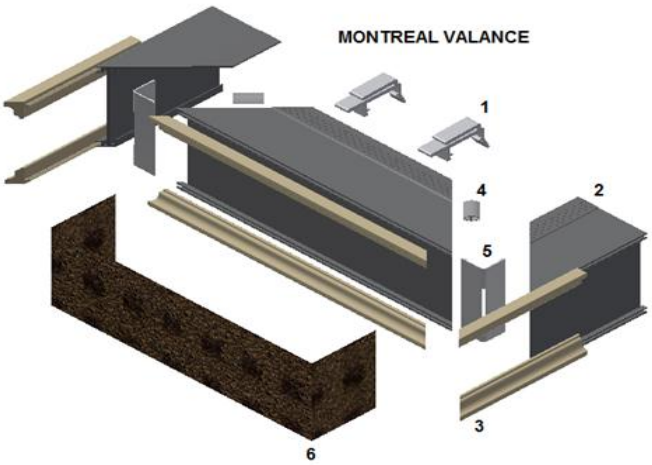

Item	Part Number	Description
1	15046-100-000	Valance Clip
2	05944-040-035	Montreal Valance 3.5"
3	05945-100-000 Or 05945-040-000	Montreal Valance Trim
4	05947-000-000	Montreal Valance Retainer Clip
5	05910-000-000	Metal Corner
6	VARIES	PVC Slat or Fabric Insert

❖ **Montreal Valance Clearance and Return Sizes**

Product	Slat	Ext Brackets	Mount	Clearance	Return Size
Montreal Valance	3.5"	N/A	Inside	N/A	1 ¾"
		15039-XXX-089	Outside	3/8"	4 7/8"
		15040-XXX-127	Outside	1"	5 1/2"

VERTICAL BLIND VALANCES - EXPLODED VIEW

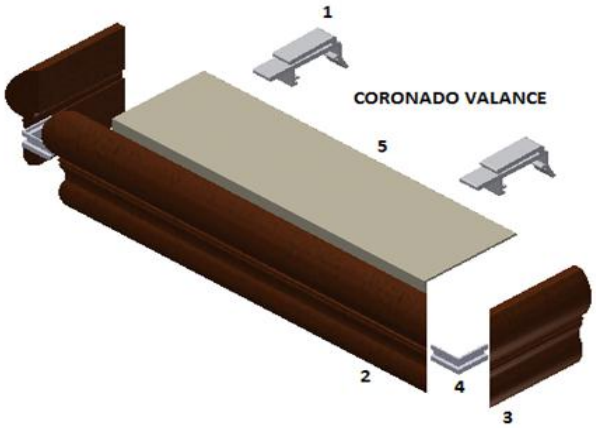

Item	Part Number	Description
1	15046-100-000	Valance Clip
2	08420-XXX-000	Coronado Valance
3		Coronado Valance Return
4	08970-001-000	Valance Return Clip
5	05943-001-000	Coronado Dust Cover

❖ **Coronado Valance Clearance and Return Sizes**

Product	Slat	Ext Brackets	Mount	Clearance	Return Size
Coronado Valance	3.5"	N/A	Inside	N/A	1 ½"
		15039-XXX-089	Outside	3/8"	4 1/8"
		15040-XXX-127	Outside	1"	4 7/8"

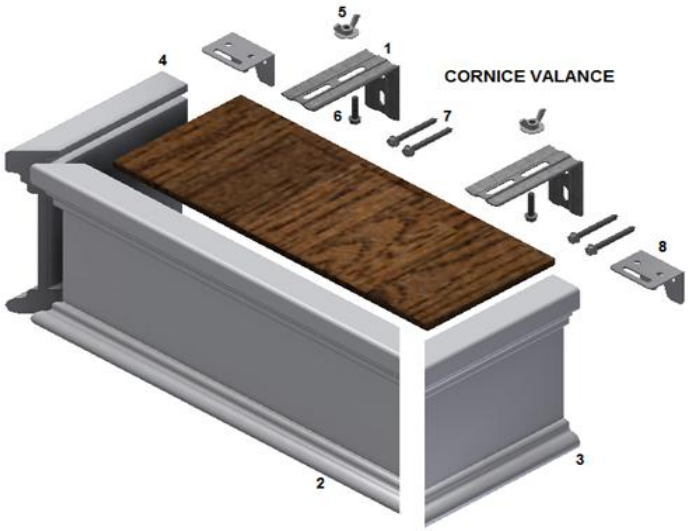

Item	Part Number	Description
1	05211-000-000	3" L Bracket
2		
3	Varies	Cornice Valances
4	08290-000-001	1" Dust Cover
	08290-000-004	4" Dust Cover
	08290-000-005	5" Dust Cover
5	08754-000-000	Wing Nut #8
6	08757-000-000	Hex Washer Machine Screw 5/8"
7	05972-000-000	#6 1.5" Hex Screw
8	08812-000-000	Cornice 1x1 Angle Iron L - Bracket

❖ **Cornice Valance Clearance and Return Sizes**

Product	Slat	Ext Brackets	Mount	Clearance	Return Size
Cornice Valance	3.5"	08812-000-000	Inside	N/A	1 ¼"
		15039-XXX-089	Outside	3/8"	4 ¼"
		15040-XXX-127	Outside	1"	5 ¼"

VERTICAL BLIND VALANCES - EXPLODED VIEW

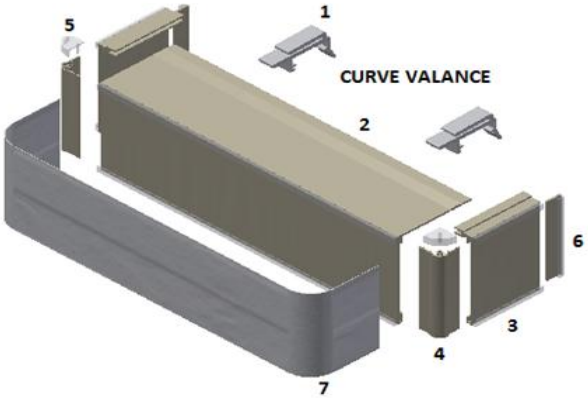

Item	Part Number	Description
1	15046-100-000	Valance Clip
2	05942-000-000	Curved Corner Valances
3	05942-001-000	Curved Corner Returns
4	05183-000-000	Curved Corners
5		Clear Cap
6	N/A	Return Clip
7	VARIES	PVC Slat or Fabric Insert

❖ **Curved Valance Clearance and Return Sizes**

Product	Slat	Ext Brackets	Mount	Clearance	Return Size
Curved Valance	3.5"	N/A	Inside	N/A	1 1/8"
		15039-XXX-089	Outside	3/8"	3 5/8"
		15040-XXX-127	Outside	1"	4 3/8"

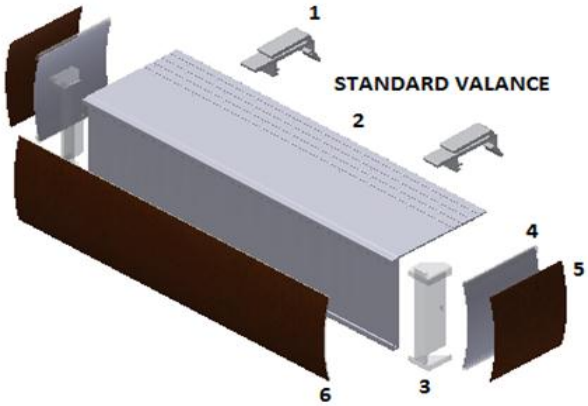

Item	Part Number	Description
1	15046-100-000	Valance Clip
2	05942-000-000	Curved Corner Valances
3	05182-000-000	Closed Corner
4	04910-040-000	Returns
5	VARIES	PVC Slat
6	VARIES	PVC Slat

❖ **Standard Valance Clearance and Return Sizes**

Product	Slat	Ext Brackets	Mount	Clearance	Return Size
Standard Valance	3.5"	N/A	Inside	N/A	1 ½"
		15039-XXX-089	Outside	3/8"	4 ¼"
		15040-XXX-127	Outside	1"	5"